⚠Attention!

- This item is meant for hobbyists 15 years of age or older. Please do not give this item to children under 15.
- This item is intended for use with the Zoukei-mura 1/32 "He 219 A-0 Uhu."
- The polyethylene bags that contain the parts and assembly manual present a suffocation risk. Please do not drop the parts or bend them in unintended ways, as they may be damaged.
- In order to properly express the shape of the sculpts, it was unavoidable for some parts to have sharp edges. Please be careful.

ZOUKEI-MURA INC. PRESENTS
SUPER WING SERIES
1/32 「He 219 A-0 Uhu」
These are extra parts to be used with the "He 219 A-0 Uhu" kit.

造形村 ZOUKEI-MURA INC.
PRODUCED BY MASTER

http://www.zoukeimura.co.jp/
http://www.master-model.pl/
■Plan & Design : Zoukei-Mura, Inc.
■Manufacturer : MASTE-MODEL
■Distributor : VOLKS, Inc.
http://www.volks.co.jp/en/index.aspx
60 Goshonouchi Nakamachi Shichi-jo, Shimogyo-ku, Kyoto Japan 600-8862

SUPER WING OPTIONS

SWS SUPER WING SERIES
ZOUKEI-MURA INC. PRESENTS
SUPER WING SERIES. No.6 SWS06-M04

1/32 HEINKEL
He 219 A-0 Uhu

Turned Metal Machine Gun Set

This kit is made of turned metal. Please be careful during assembly.
Plastic model cement won't work on these parts. Please use suitable instant glue.

造形村 ZOUKEI-MURA INC.

©ZOUKEI-MURA INC, All Rights reserved.

¥2,800 (Including Tax ¥2,940)

SUPER WING OPTIONS

ZOUKEI-MURA INC. PRESENTS
SUPER WING SERIES. No.6 SWS06-M04

1/32 HEINKEL He 219 A-0 Uhu

Turned Metal Machine Gun Set

Chart of Included Parts

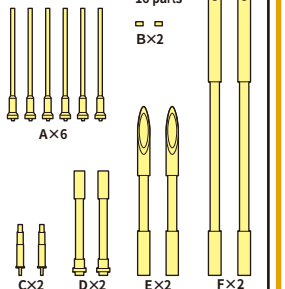

Turned Metal Machine Gun Set

4 518992 528380

¥2,800 (Including Tax ¥2,940)

◇Weapon Frame Process

1/32He 219 A-0 Uhu Instruction Manual P.20

Cut down the plastic tube (parts in red) of the weapon frame (F-41), and affix parts E and F. Then, as mentioned in blue, open a 4.0mm hole in the bulkhead, or cut it to allow the part to enter.

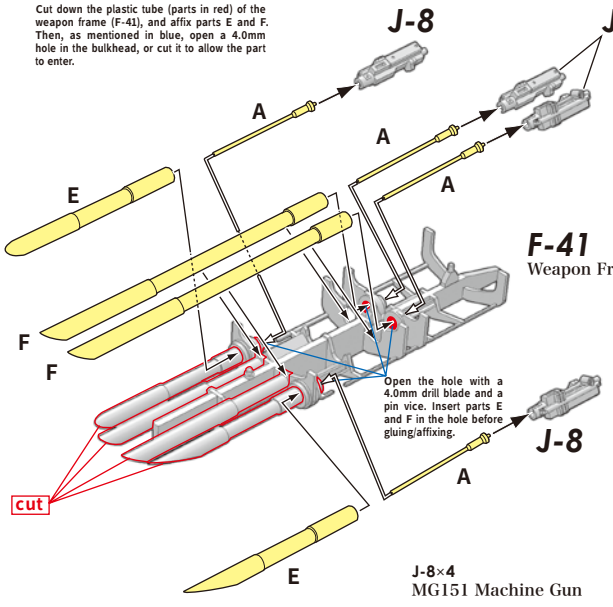

Part A is fixed as the cannon of the MG151 gun barrel (J-8). It reproduces the blast tubes (parts E and F) inserted in the cannon, similar to the real airplane. When gluing, remember to check if the cannon is well inserted in the blast tube.

Do not use.
F-39
F-40
Blast Tube

The opening of parts E and F have an angle. Before assembling the parts, please verify that the parts are in their original orientation or if the orientation allows joining them with the underside cover armament part (L-2), then affix them. If the orientation is wrong, the underside cover armament part may not be fixed.

The MG151 turned metal machine gun barrel (J-8) and the link shoot (I-1, I-13) are fixed as described in the 1/32 " He 219 A-0 Uhu " instruction manual.

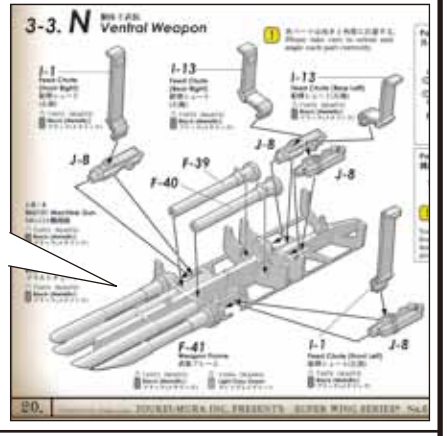

◇Inner-wing Blast Tube Replacement

1/32He 219 A-0 Uhu Instruction Manual P.26

Complete reproduction of the insertion of the inner-wing MG151 gun barrel (J-8) cannon is the blast tube. Use the parts A, B, and D as shown below.

The picture shows the right inner-wing armament 3-4 E. On the left side, assemble parts A, B, and D with J-8 and I-10 to create the left inner wing armament 3-4 F.

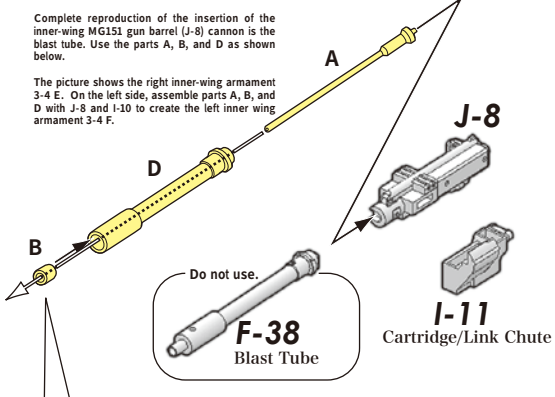

Picture of the finished assembly.

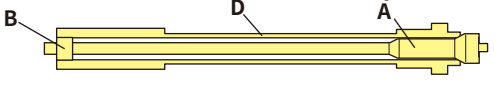

Assemble 2 sets for the right and the left sides.

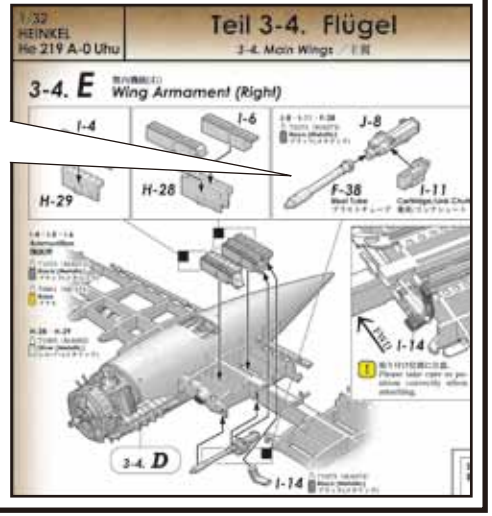

◆◆Important Points for Assembly◆◆

■Before opening the bag, please carefully read this instruction manual and verify that all the parts are included. Please also refer to the 1/32 " He 219 A-0 Uhu " instruction manual to use these parts.

■To build this kit, basic tools are required (as mentioned on page 6 of the He 219 instruction manual). Please make sure these tools are at hand before building the kit.

■This kit allows the replacement of the MG151 or the MG108 turned metal machine gun barrels of the 1/32 " He 219 A-0 Uhu, "and also completely reproduces the insertion of the cannon inside the blast tube. Method of replacement for each part is different, please refer to the proper instruction manual before assembling the 1/32 " He 219 A-0 Uhu. "

■To affix the parts of the kit, please use an instant glue. Please do not use glue dedicated to plastic models. Before painting, make a primer coat using a Metal Primer. (Without primer coat, paint may peel.)

■The recommended brand for painting your kit is the latest line of paint from Vallejo Color, due to its non-toxicity and environmental friendliness. While referring to resources on historical Luftwaffe aircrafts, you may paint the model with the coloring of your choice.

※Please use caution when handling the tools and solvents used for assembly and painting by referring to their instruction manuals.

We take the utmost of care when overseeing manufacturing, but if your kit is among the very small percentage that contains a defective part, please contact customer service within two weeks of your purchase with your full name and order number.

Purchasers from VOLKS Japan International Web Site:
Please contact imos@volks.co.jp.
Purchasers from VOLKS USA:
Please contact service@volksusa.com.

1/32" He 219 A-0 Uhu "Assembly Instructions

These parts will be inserted when assembling the 1/32 " He 219 A-0 Uhu " kit. Please refer to the instruction manual of the " He 219 A-0 Uhu. "

◇MK108 Gun Barrel Replacement

1/32He 219 A-0 Uhu Instruction Manual P.19

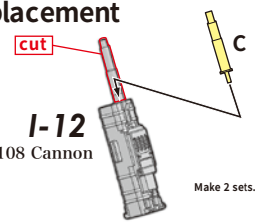

Cut the cannon of MK108 gun barrel (part I-12) and affix part C. When doing this, make a hole in the fixed part with a drill blade and a pin vice of 1.0mm. Insert part C in this hole and glue/affix it.
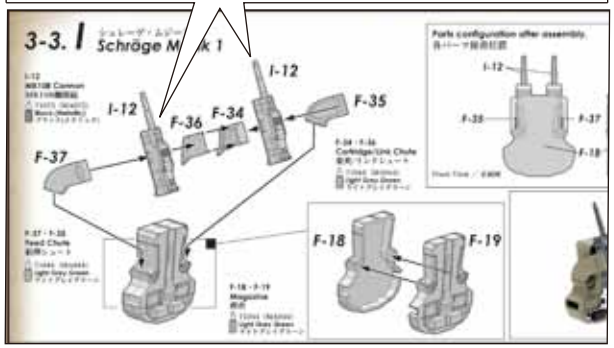
Make 2 sets.