⚠Attention!

- This item is meant for hobbyists 15 years of age or older. Please do not give this item to children under 15.
- This item is intended for use with the Zoukei-mura 1/32 "Dornier Do 335".
- The polyethylene bags that contain the parts and assembly manual present a suffocation risk. Please do not drop the parts or bend them in unintended ways, as they may be damaged.
- In order to properly express the shape of the sculpts, it was unavoidable for some parts to have sharp edges. Please be careful.

ZOUKEI-MURA INC. PRESENTS
SUPER WING SERIES
1/32 Dornier
Do 335
These are extra parts to be used with the "Dornier Do 335" kit.

造形村 ZOUKEI-MURA INC.

http://www.zoukeimura.co.jp/
■Plan & Design : Zoukei-Mura, Inc.
■Manufacturer : MASTE-MODEL
■Distributor : VOLKS, Inc.
http://www.volks.co.jp/en/
60 Goshonouchi Nakamachi Shichi-jo, Shimogyo-ku, Kyoto Japan 600-8862

SUPER WING OPTIONS

ZOUKEI-MURA INC. PRESENTS
SUPER WING SERIES. No.10 [SWS10-M03]

1/32 Dornier

Do 335A-0 Pfeil

Turned Metal Machine Gun and Pitot Tube Set

ZOUKEI-MURA INC. PRESENTS
SUPER WING SERIES.
1/32 Dornier
Do 335
These are extra parts to be used with the "Dornier Do 335" kit.

This is made of turned metal. Please note that these parts cannot be glued with plastic model kit cement. Instant glue should be used instead.

造形村 ZOUKEI-MURA INC.

■Plan & Manufacturer : Zoukei-Mura, Inc.
■Design : MASTE-MODEL
■Distributor : VOLKS, Inc.

©ZOUKEI-MURA INC, All Rights reserved.

SUPER WING OPTIONS
ZOUKEI-MURA INC. PRESENTS SUPER WING SERIES. No.10 [SWS10-M03]
1/32 Dornier Do 335A-0 Pfeil
Turned Metal Machine Gun and Pitot Tube Set
SUPER WING SERIES
1/32 Dornier Do 335
These are extra parts to be used with the "Dornier Do 335" Kit.
Turned Metal Machine Gun and Pitot Tube Set
4 518992 529158

◆◆Important Points for Assembly◆◆

- Before opening the bag, please carefully read this instruction manual and verify that all the parts are included. Please also refer to the 1/32 "Dornier Do 335" Instruction Manual to use these parts.
- You need the basic tools mentioned on page 6 of the kit Instruction Manual to process the parts of this set.
- This set is meant to replace the MG 151/20 Gun Barrel, FuG 25a Antenna and Pitot Tube of the 1/32 "Dornier Do 335". Insert these parts in your 1/32 "Dornier Do 335" after checking the parts.
- To affix the parts of the kit, please use instant glue. Please do not use glue dedicated to plastic models. Before painting, make a primer coat using the Metal Primer. (Without primer coat, paint may peel.)
- The recommended brand for painting your kit is the latest line of acrylic paint from Vallejo Color. Please refer to the Zoukei-mura 1/32 "Dornier Do 335" Instruction Manual and Luftwaffe historical manuals to paint the model with the coloring of your choice.

※Please carefully use the tools and solvents for assembly and painting by referring to their instruction manuals.

Chart of Included Parts

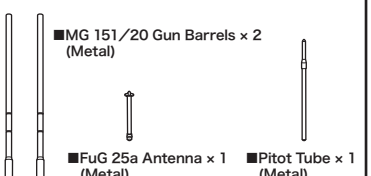

We take the utmost of care when overseeing manufacturing, but if your kit is among the very small percentage that contains a defective part, please contact customer service within two weeks of your purchase with your full name and order number.

Purchasers from VOLKS Japan International Web Site:
Please contact imos@volks.co.jp.
Purchasers from VOLKS USA:
Please contact service@volksusa.com.

1/32 "Dornier Do 335" Assembly Instructions

These parts will be inserted when assembling the 1/32 "Dornier Do 335" kit. Please refer to the instruction manual of the "Dornier Do 335."

◇Gun Barrels Attachment

1/32 Dornier Do 335 Instruction Manual P.14

When you build the 1/32 "Dornier Do 335", instead of part H-45, attach the MG 151/20 Gun Barrels from this set.

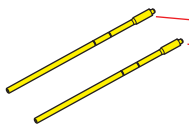

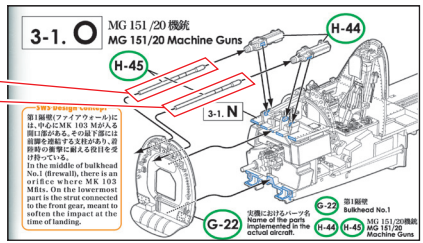

◇FuG 25a Antenna, Pitot Tube Attachment

1/32 Dornier Do 335 Instruction Manual P.51

You can attach the FuG 25a Antenna and the Pitot Tube from this set instead of the corresponding plastic parts of the kit.

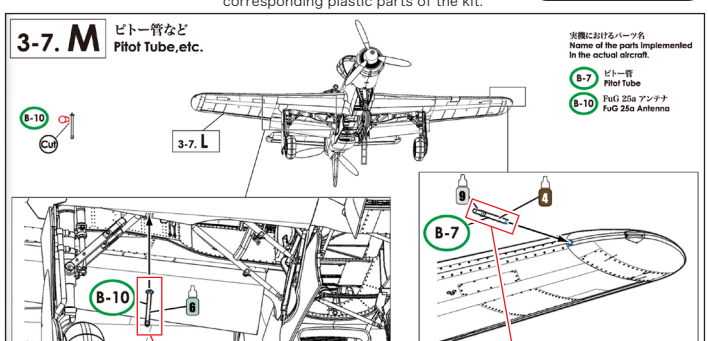

Instead of part B-10, attach the FuG 25a Antenna from this set.

Instead of part B-7, attach the Pitot Tube from this set.