⚠Attention!

- This item is meant for hobbyists 15 years of age or older. Please do not give this item to children under 15.
- This item is intended for use with the Zoukei-mura 1/32 "He 219 A-0 Uhu"
- The polyethylene bags that contain the parts and assembly manual present a suffocation risk. Please do not drop the parts or bend them in unintended ways, as they may be damaged.
- In order to properly express the shape of the sculpts, it was unavoidable for some parts to have sharp edges. Please be careful.

ZOUKEI-MURA INC. PRESENTS
SUPER WING SERIES
1/32
"He 219 A-0 Uhu"
These are extra parts to be used with the "He 219 A-0 Uhu" kit.

造形村
ZOUKEI-MURA INC.

http://www.zoukeimura.co.jp/

■Plan & Design : Zoukei-Mura, Inc.
■Distributor : VOLKS, Inc.
http://www.volks.co.jp/en/index.aspx
60 Goshonouchi Nakamachi Shichi-jo, Shimogyo-ku, Kyoto Japan 600-8862

SUPER WING OPTIONS

SWS SUPER WING SERIES

ZOUKEI-MURA INC. PRESENTS
SUPER WING SERIES. No.06 SWS06-M02

1/32 HEINKEL

He 219 A-0 Uhu

Weighted Tires (Without Tread)

ZOUKEI-MURA INC. PRESENTS
SUPER WING SERIES.
1/32
"He 219 A-0 Uhu"
These are extra parts to be used with the "He 219 A-0 Uhu" kit.

These parts are made of urethane resin. Please be careful during assembly.
Plastic model cement won't work on these parts. Please use a suitable instant glue.

造形村
ZOUKEI-MURA INC.

¥2,000 (Including Tax¥2,100)

SUPER WING OPTIONS
ZOUKEI-MURA INC. PRESENTS SUPER WING SERIES. No.6
1/32 HEINKEL SWS06-M02
He 219 A-0 Uhu
©ZOUKEI-MURA INC. All Rights reserved.
SUPER WING SERIES
1/32 "He 219 A-0 Uhu"
These are extra parts to be used with the "He 219 A-0 Uhu" kit.

Weighted Tires (Without Tread)
4 518992 528366
¥2,000 (Including Tax¥2,100)

1/32 " He 219 A-0 Uhu " Assembly Instructions

These parts will be inserted when assembling the 1/32 " He 219 A-0 Uhu " kit. Please refer to the instruction manual of the " He 219 A-0 Uhu. "

◇Front Wheel Insertion

1/32He 219 A-0 Uhu Instruction Manual P.32

When assembling the 1/32 " He 219 A-0 Uhu, " carefully insert the front wheel instead of the parts I-27.

■Front wheel x 1

※When affixing the front wheel, please pay close attention to its direction to make sure that the flattened surface touches the ground.

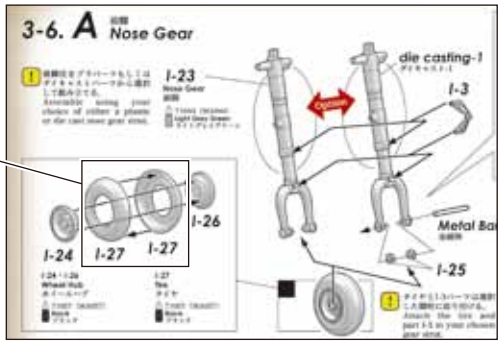

◇Main Wheel Assembly

1/32He 219 A-0 Uhu Instruction Manual P.32

When assembling the 1/32 " He 219 A-0 Uhu, " carefully insert the front wheel instead of the parts J-19. Assemble two wheels on each strut. Assemble the left and the right sides in the same way.

■Main wheel

■Main wheel

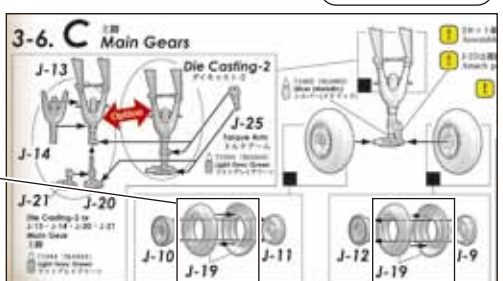

※Assemble the main wheels so that their flattened surfaces touch the ground. Because the assembly of the wheel hub (J-9, J-10, J-11, J-12) with the strut is defined by the shape of the axis, please check that the wheels touch the ground during assembly.

To affix the part to the 1/32 " He 219 A-0 Uhu, " please read from page 32 on of the He 219 instruction manual.

Additionally affixing the separately sold " Metal struts " part will increase the stability and strength of the kit.

◆◆Important Points for Assembly◆◆

- ■Please carefully read the assembly manual prior to opening and make sure that everything is included.
- ■To use this item, tools such as ●nippers, ●craft knife, ●files, ●sanding papers, ●instant glue, etc., are required, so please prepare them.
- ■Please prepare the parts first. You can remove seam lines and gate marks with tools such as nippers, a craft knife and files. Urethane resin is softer than the plastic material used for the kit, so be careful to avoid carving too much. Air bubbles can be filled with putty (epoxy, plastic, etc.) or similar, then finished with sanding paper. In the case that mold details are lost, you can recover them with tools such as spatulas.
- ■During assembly, adjust the orientation of each part while checking the balance and pose of the entire kit.
- ■Instant glue should be used for these parts. Please note that they cannot be glued with plastic model kit cement.
- ■We recommend using brass wire (sold separately) to reinforce the areas where the parts are glued together. Use a pin vise and drill bit to open a hole on both sides of each gluing surface, then insert the ends of a brass wire into the holes to connect the sides. This will greatly increase the strength of each joint. (Using the wires without glue to temporarily build a figure is called dry fitting. We recommend doing so in order to check each figure's balance.)
- ■Base preparation is required before painting. Please thoroughly finish the base with a coat of surfacer spray (otherwise, the paint will chip off as time passes).
- ■The recommended brand for painting your kit is the latest line of paint from Vallejo Color, due to its non-toxicity and environmental friendliness. While referring to resources on historical Luftwaffe aircrafts, you may paint the model with the coloring of your choice.

※When it comes time to use tools and paints, please carefully follow the individual instructions respective to each tool for your safety.

Chart of Included Parts

■Front wheel x 1 ■Main wheels x 4

We take the utmost of care when overseeing manufacturing, but if your kit is among the very small percentage that contains a defective part, please contact customer service within two weeks of your purchase with your full name and order number.

Purchasers from VOLKS Japan International Web Site:
Please contact imos@volks.co.jp.
Purchasers from VOLKS USA:
Please contact service@volksusa.com.